Computer Systems
Lecture 7

Overview

- Principal components of a computer
- Motherboard
- Processor and Registers
- Coprocessors
- Buses
- Registers
- **Machine Cycle**
- **CISC & RISC**
- Output Hardware

Reminder: The von Neumann Model

- The idea formulated by von Neumann (late 1940s):
  - The **computer** is a general-purpose machine controlled by an executable program.
  - A p**rogram** is a list of instructions used to direct a task.
  - Both program and data are held in computer's **memory** (store) and both represented by **binary codes**.
  - A **processor** is an active part of the machine that executes the program instructions.

The principal components of a computer

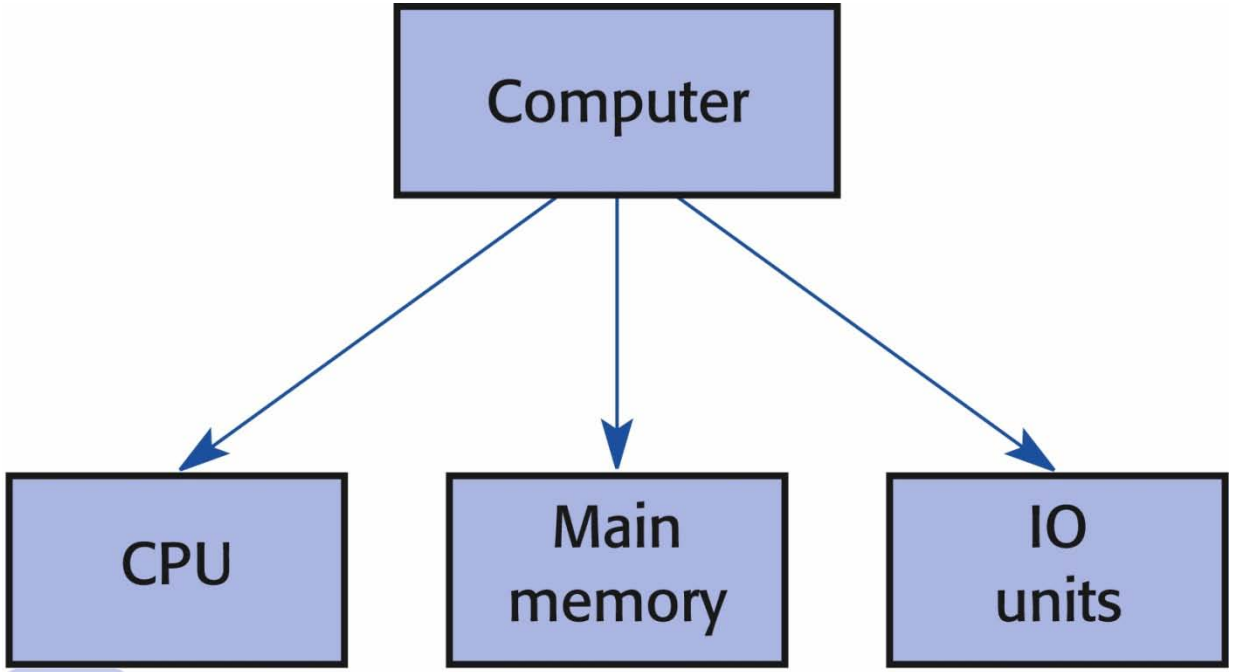

Fig. 3.1 The principal components of a computer.

© Pearson Education 2001

- These are the minimum set of components for a working digital computer.
- A PC motherboard often appears much more complicated.

Motherboard

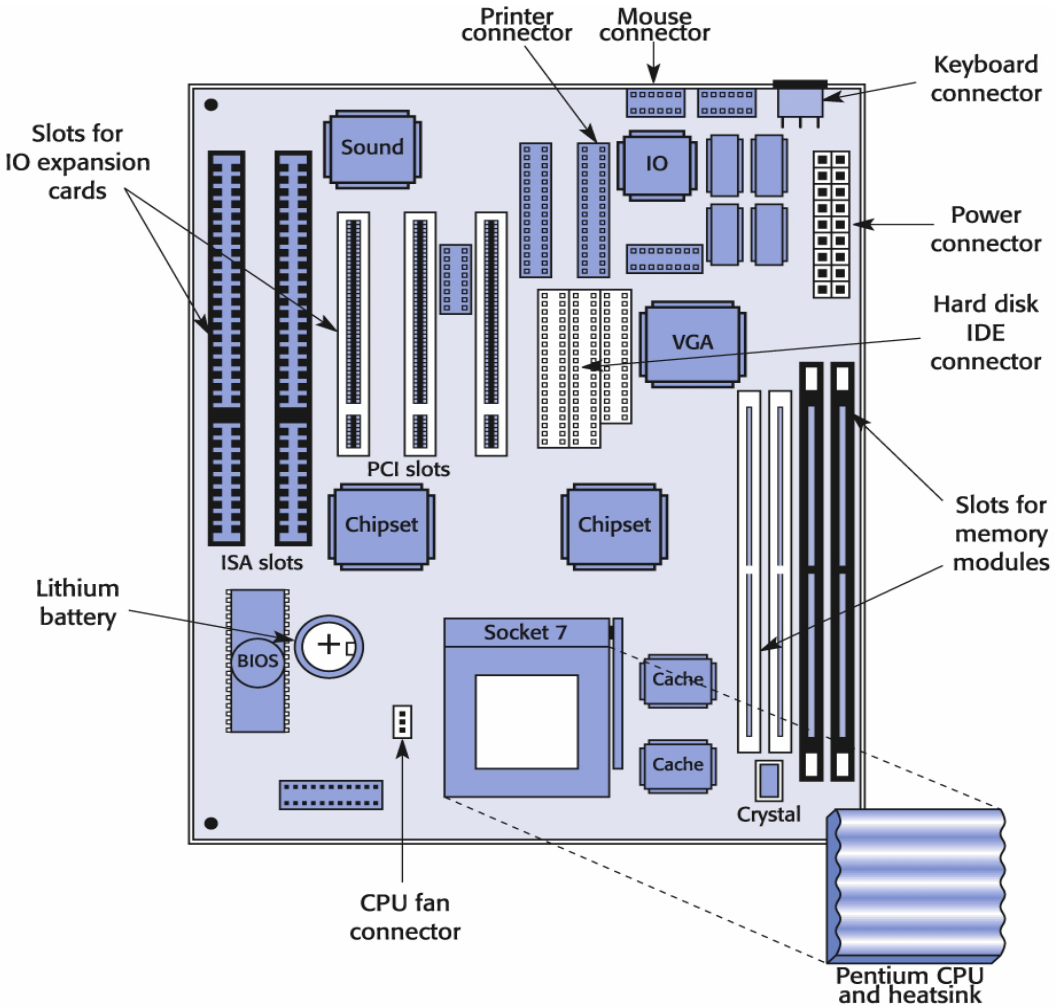

Fig. 3.2 PC-Atmotherboard, showing the locations of the CPU, memory and IO cardsockets.

© PearsonEducation2001

Pentium 4 Motherboard

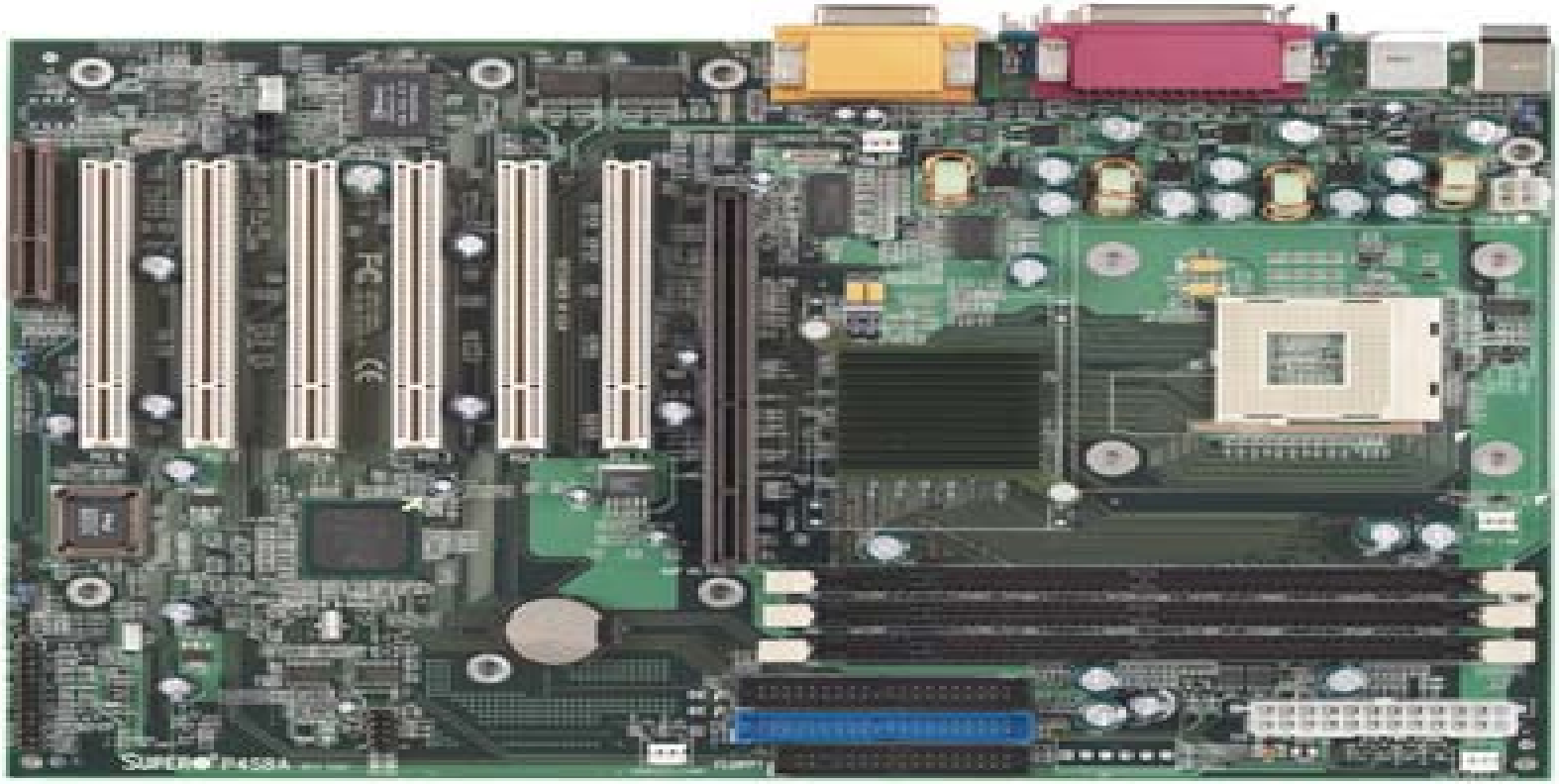

Motherboard (cont.)

- Three principal subsystems:
  - CPU,
  - main memory, and
  - input-output units.
- Each of these is often made up of many components.

- How do they exchange data?

What is a computer processor? What does it consist of?

Processor and Registers

- **Processor**
  - **arithmetic/logic unit** (ALU)
  - **control unit**: part of a CPU responsible for performing the machine cycle - fetch, decode, execute, store
- **Registers**
  - **Program counter** (PC): contains the address of the next instruction to execute
  - **Instruction register** (IR): part of a CPU control unit that stores an instruction

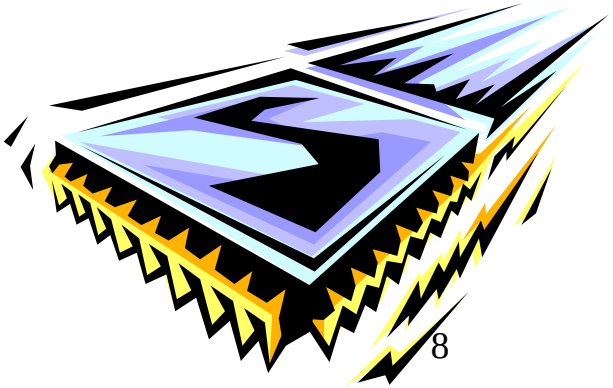

Coprocessors: Assistants to the CPU

- Coprocessors: microprocessors performing specialized functions that CPU cannot perform or cannot perform as well and as quickly
  - math
  - graphics

8086 & 8087

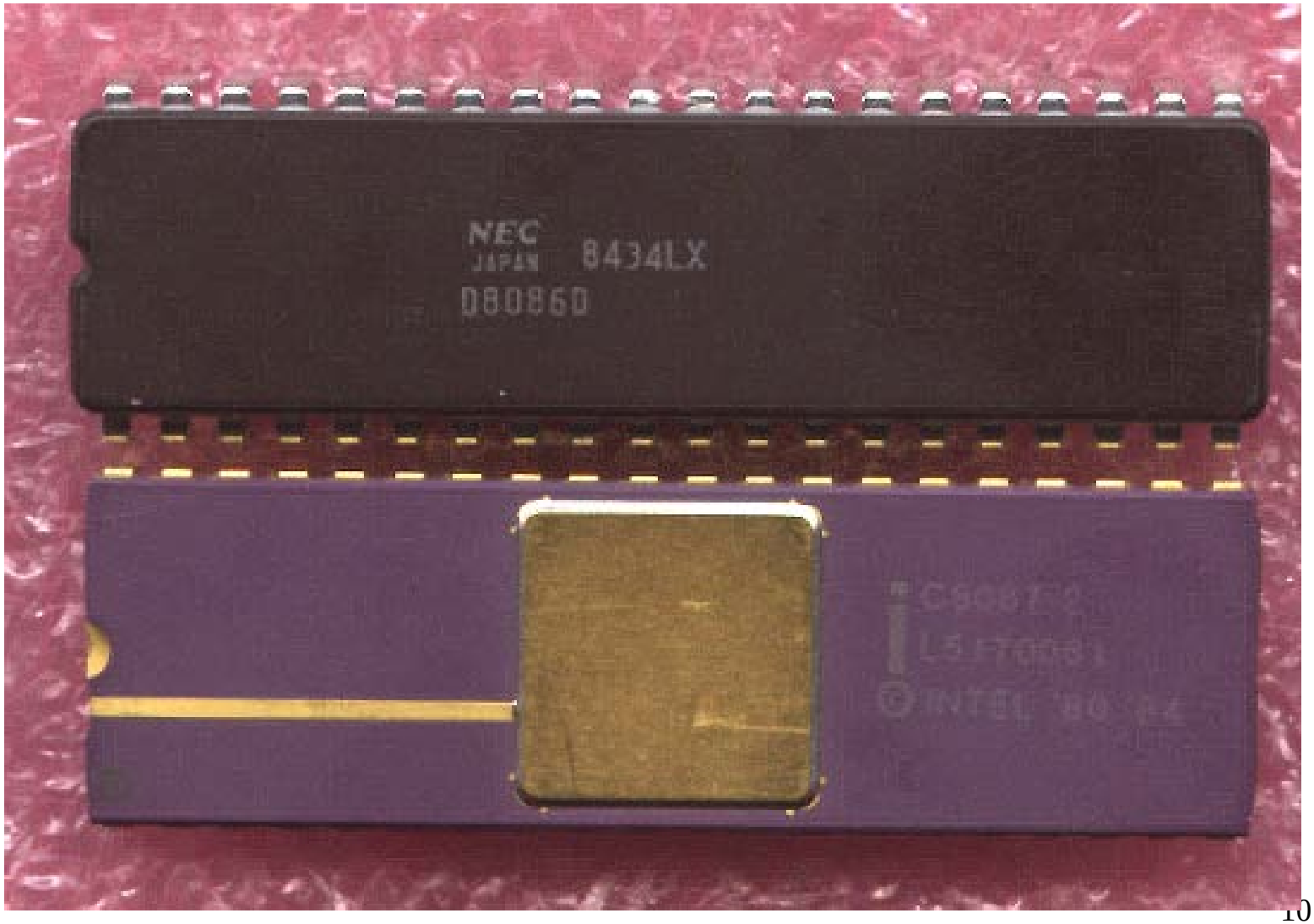

Boards and Chips

- Circuit boards
- Use aluminum or copper to conduct electronic messages

- Chips of silicon
- Semiconductor

VGA Board

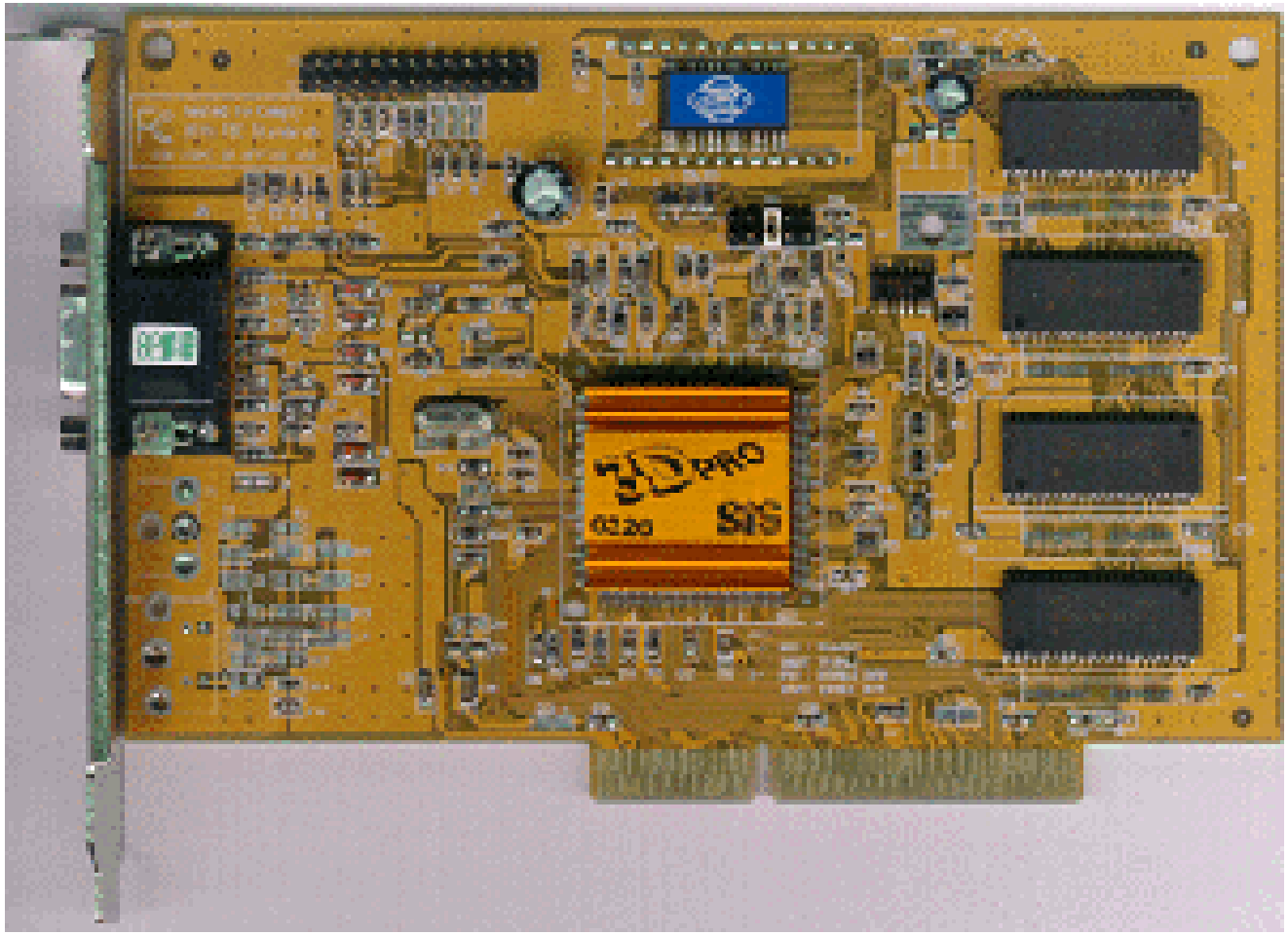

Future

- PC on a chip

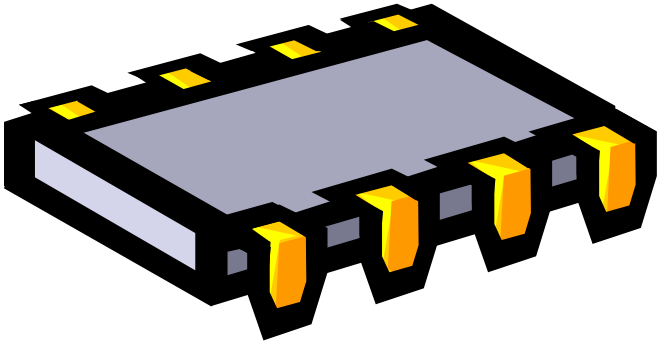

How do they exchange data? via Buses

- On the motherboard, all the components are interconnected by **buses** (“signal highways”).
- A bus is a bundle of conductors, wires, or tracks.
- Typically, there are **address**, **data** and **control** buses, each including several signal lines.
  - Intel 8086: 20 shared address/data lines, and a further 17 lines for control.
  - Intel Pentium: data bus 64 lines, and the address bus 32 lines.

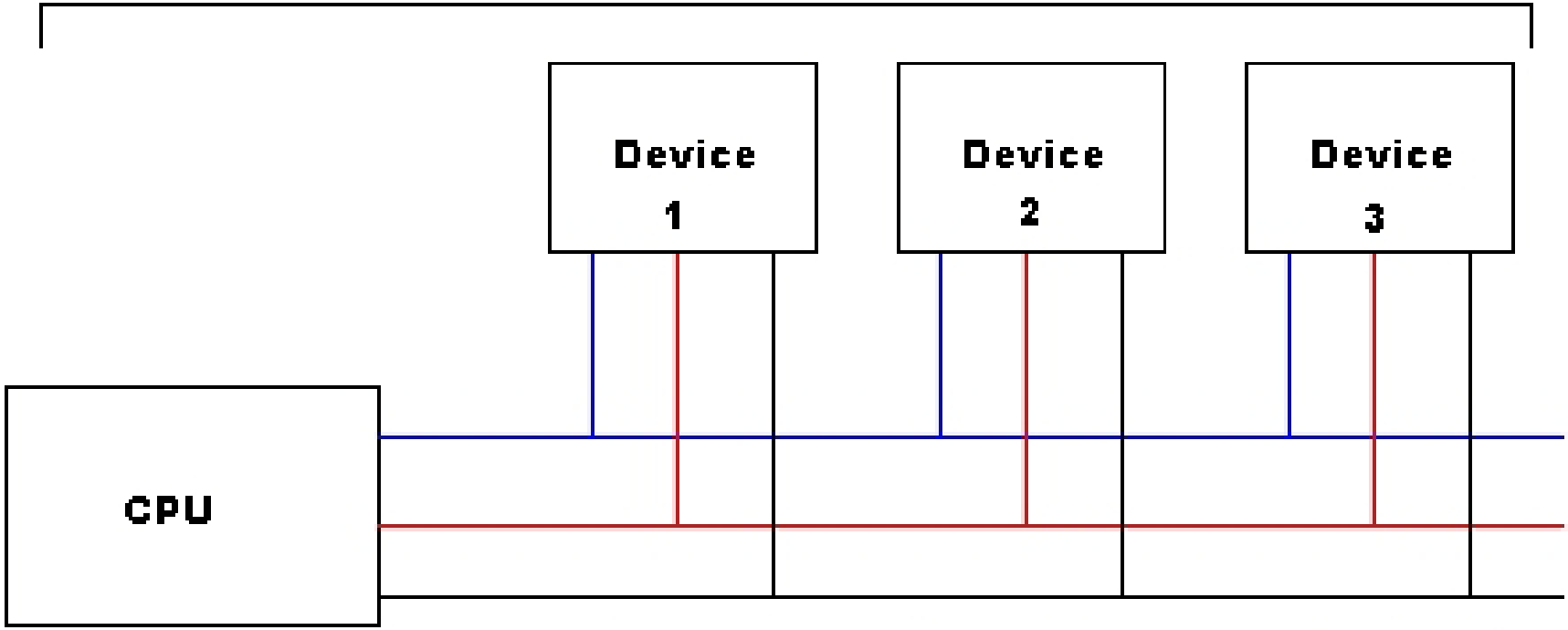

Diagram shows how devices are attached to a generic bus.

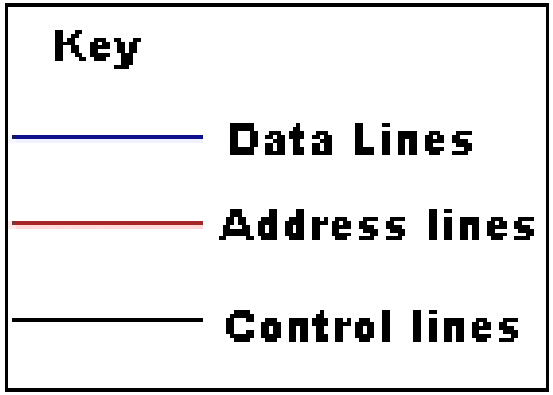

Buses (cont.)

- Each hardware unit is connected to all these buses.
  - A simple way of building up complex systems in which each unit can communicate with each other.
  - Little disruption when plugging in new units and swapping out failed units.

System interconnections

- The connected devices can have access to any signal line they require.

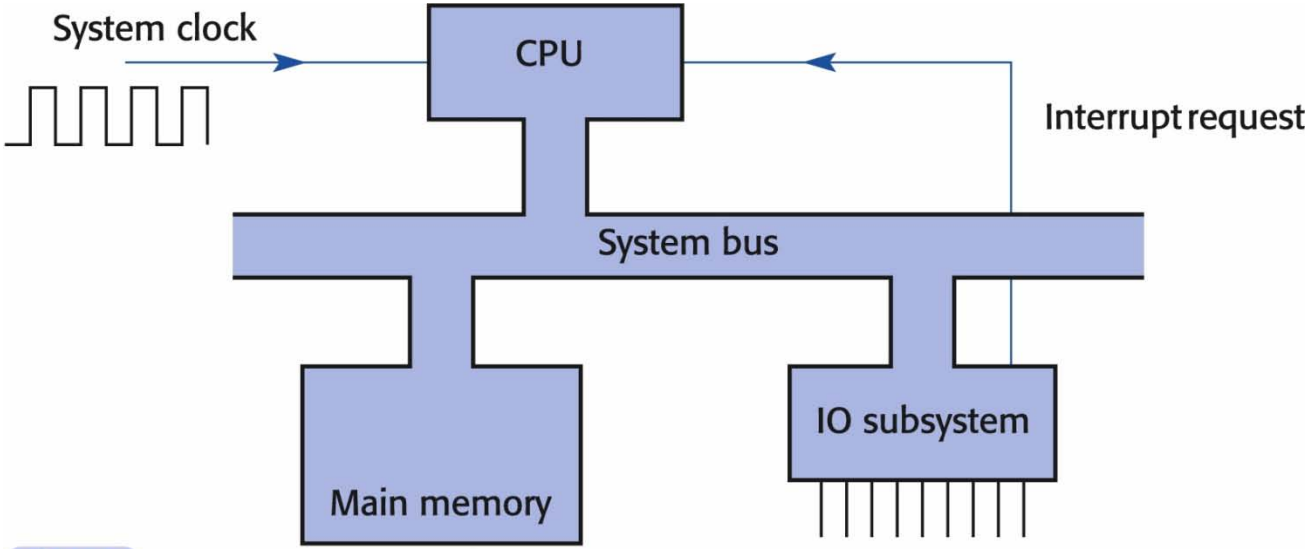

Fig. 3.3 System interconnection schematic.

© PearsonEducation 2001

- Bus interconnection is often represented in diagrams as a wide pathway, rather than showing the individual wires.

Bus vs. point-to-point connections

- An alternative scheme: point-to-point interconnection.
  - The number of pathways needed to link every possible pair of **n** units: **n(n-1)/2**.
  - Each pathway will still require a full-width data highway.
    - Could be 32 data lines and, say, 6 control lines.
  - The result will be a huge number of wires.

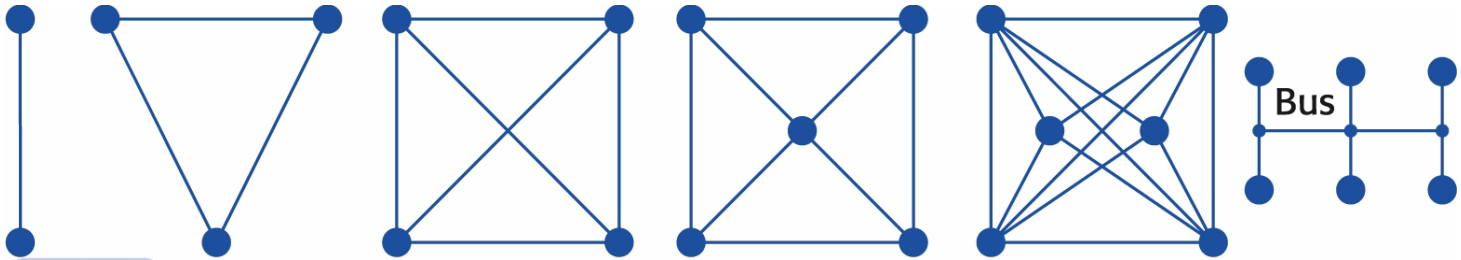

Fig. 3.4 Point-to-pointescalation comparedwith simple bus interconnection.

©Pearson Education 2001

Bus vs. point-to-point connections (cont.)

- The number of wires required for a bus is much smaller than that for point-to-point connections.
- A bus can only transfer one item of data at a time, like a railway line.
  - Leads to a limit on the performance, termed the **Bus Bottleneck**.
  - It cannot be solved by simply increasing the speed of a processor.

Q&A

- Q1. What is the difference between a ‘general purpose machine’ and a ‘special purpose machine’ (‘CPU’ vs ‘coprocessor’) ?

Q&A

- Q2. assume there are 6 devices to be interconnected via 8 data lines (wires) plus 2 control lines (wires), how many wires will be needed if point-to-point connection scheme is used?

Two parts of CPU

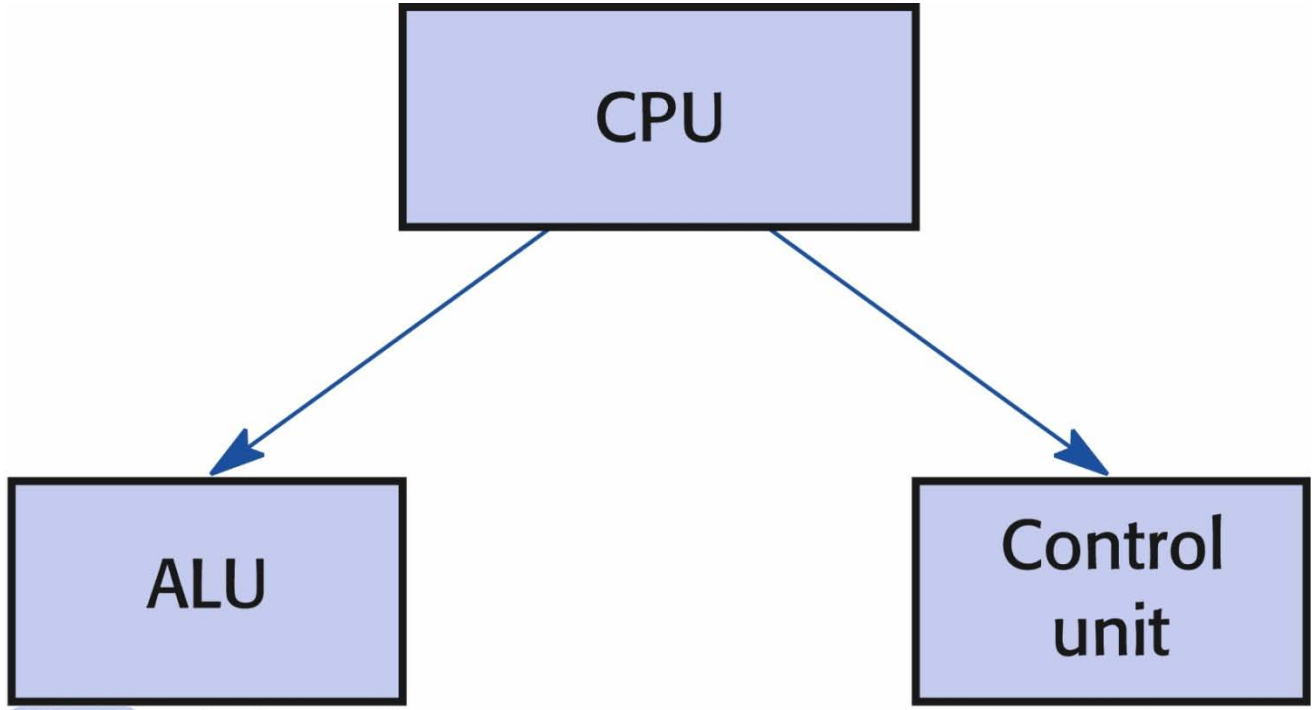

Fig. 3.5 Further decomposition.

© Pearson Education 2001

- ALU: Arithmetic and Logic Unit.

Registers

- CPU registers: small block of fast memory.
  - Temporarily store for data and address variables.
- Some CPU registers:
  - **Instruction Pointer (IP)** or Program Counter (PC).
    - Stores the address of the next instruction.
  - **Accumulator** (AX, EAX in Pentium).
    - General purpose data register.
  - **Instruction Register (IR).**
    - Stores the instruction that is being executed.
- **Memory address register (MAR).**
  - Temporarily holds address of the memory location during a bus transfer.
- **MBR**

Registers (cont.)

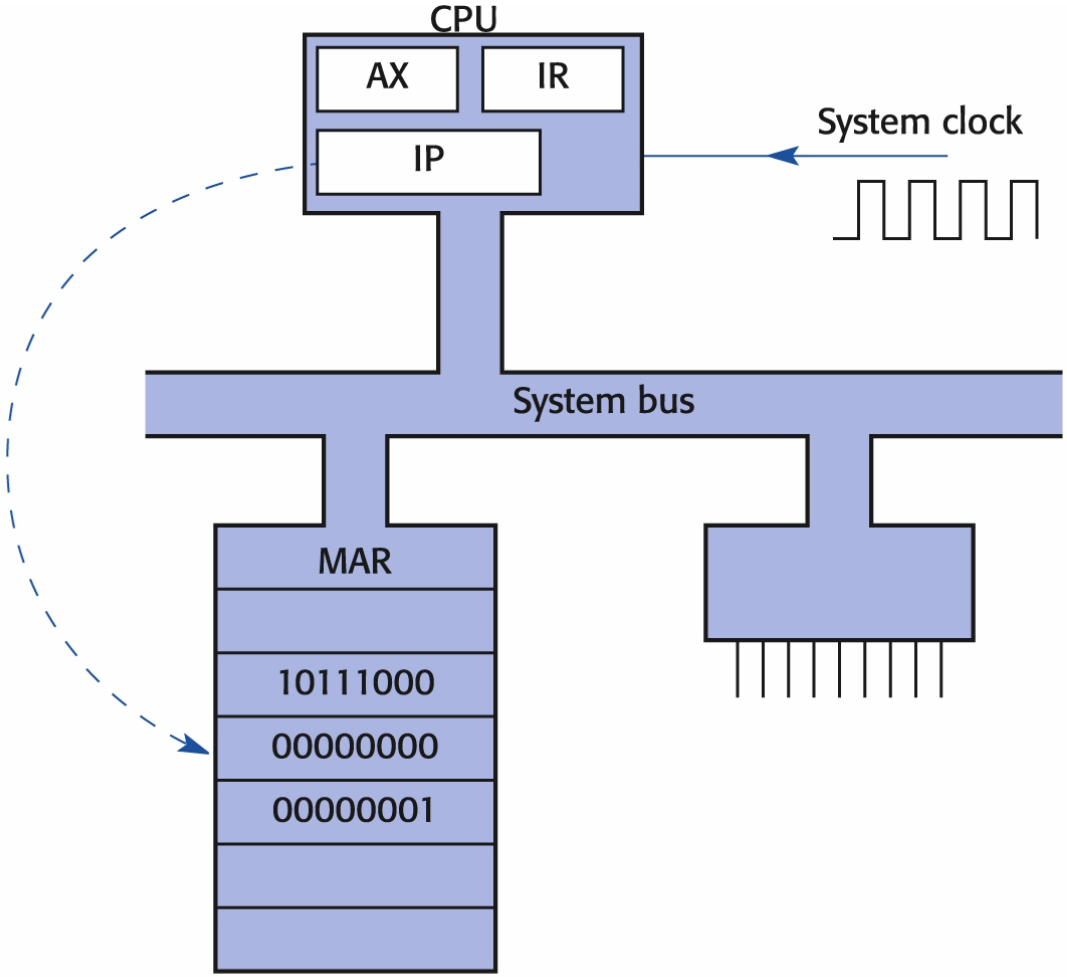

Fig. 3.6 Instruction pointer register (IP) points to the next instruction in memory.

©PearsonEducation2001

Computers speak this language: Instruction Set

- The collection of machine language instructions that a particular processor understands

  - machine language instructions
    - instructions for a specific CPU
      - designed to be executed by a computer without being translated
      - Also called **machine code**
      - Operations like: ADD, SUB, INC, DEC, etc.

How instructions are executed?

- The basic operation, known as the **fetch-execute cycle or machine cycle**.
  - The sequence whereby each instruction of the program is executed:
    - Read from the memory.
    - Decoded.
    - Executed.

Machine Cycle

I-cycle

Instruction fetch

Instruction decode

E-cycle

Execute

Store results

Machine cycle – refined

- Fetch the instruction from memory. This step brings the instruction into the *instruction register*, a circuit that holds the instruction so that it can be decoded and executed
- Decode the instruction
- [Read the effective address from memory if the instruction has an indirect address]
- Execute the instruction
- [Store the results]

The fetch phase of the cycle (in principle)

- The address in IP register is copied onto the address bus and further to MAR register.
- IP is incremented ready for the next cycle. IP now points to the next location in the program memory.
- Memory selects location and copies the content onto the data bus.
- CPU copies the instruction code from the data bus into IR.
- Decoding of the instruction starts.

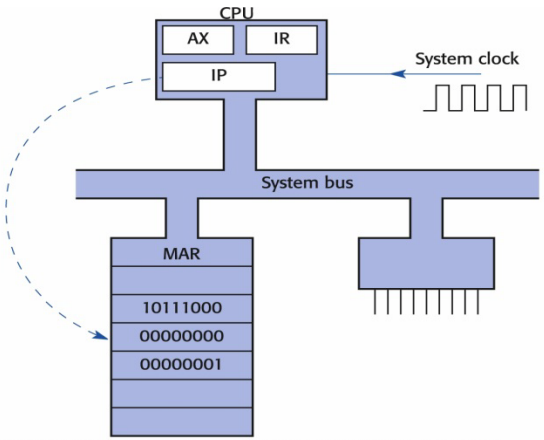

Fig. 3.6 Instruction pointer register (IP) points to the next instruction in memory.

©PearsonEducation2001

The fetch phase of the cycle (cont.)

- A Pentium instruction: **`10111000 00000000 00000001`**
- Assembly code: **`MOV AX 0x100`**

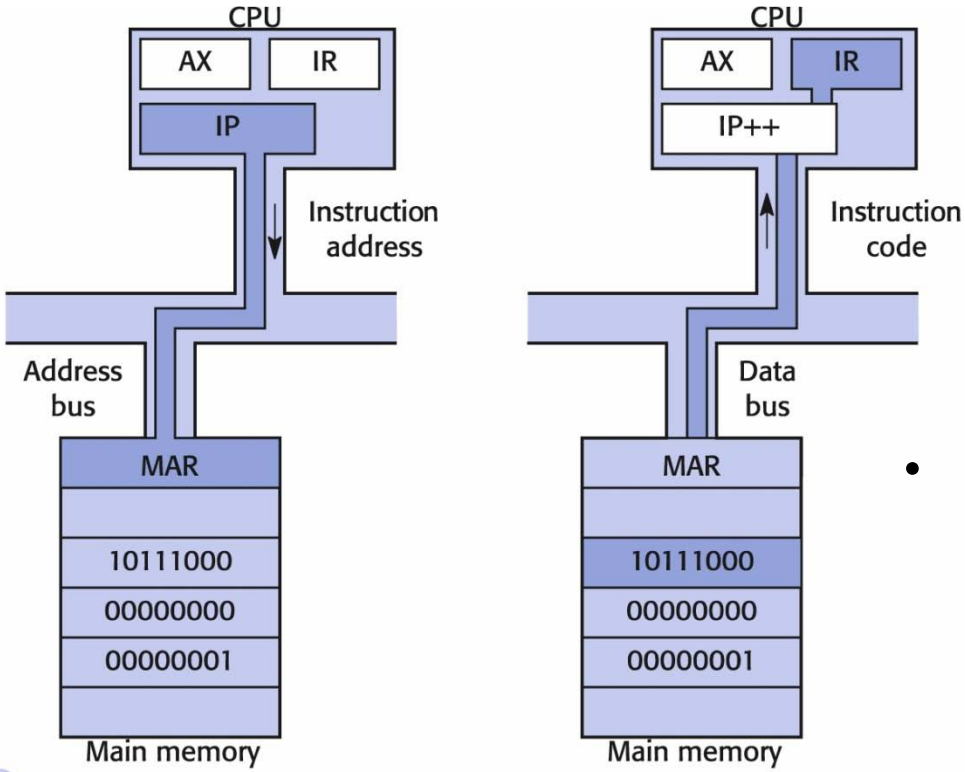

Fig. 3.7 The fetch phase of the fetch–executecycle.

© PearsonEducation2001

- Note that the content of a memory cell is different from its address (not shown in the figure).

The execution phase of the cycle

- Execute phase depends on the type of instruction.
- Example: the execution of **`MOV AX,256`** instruction includes:
  - IP is copied to address bus and latched into memory.
  - IP is incremented.
  - The value selected in memory is copied onto the data bus.
  - CPU copies the value from the data bus into AX.

The execution phase of the cycle

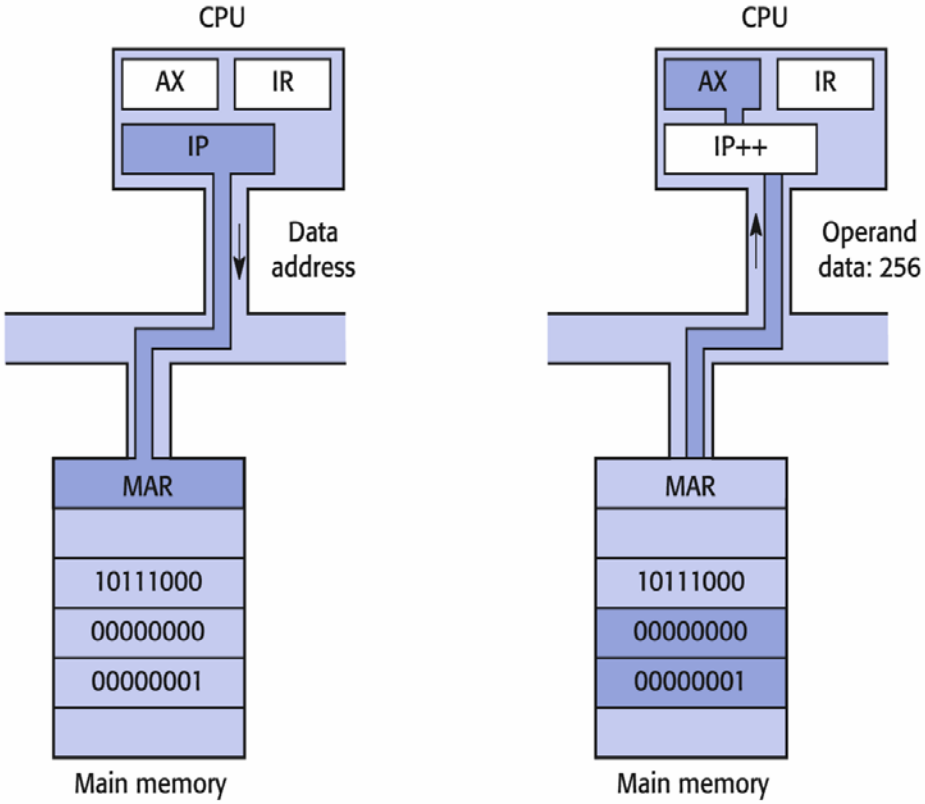

Fig. 3.8 The execution phase of the fetch–execute cycle for MOV AX, 256.

© Pearson Education 2001

Q&A

- Q3. Name 2 registers that are always used during each instruction execution.

CISC & RISC: not all processors are designed equal

- CISC ("sisk")
  - **complex instruction set**
  - most mainframes and PCs
- RISC ("risk")
  - **reduced instruction set**
  - cheaper and faster
  - shift some work to software

CISC vs RISC

- In RISC an instruction usually consists of a single word but in CISC an instruction may be several words long, requiring several fetches

RISC is faster because …

- The vacated area of the chip can be used to accelerate the performance of more commonly used instructions (how?), rather than compensating for those rarely used instructions

- Easier to optimize the design

- Simplifies translation from high-level languages into the smaller instruction set that the hardware understands (Why?), resulting in more efficient programs

Output Hardware

- Hardcopy output
  - graphics
  - letters
- Softcopy output
  - video
  - audio
    - music from MP3 for example

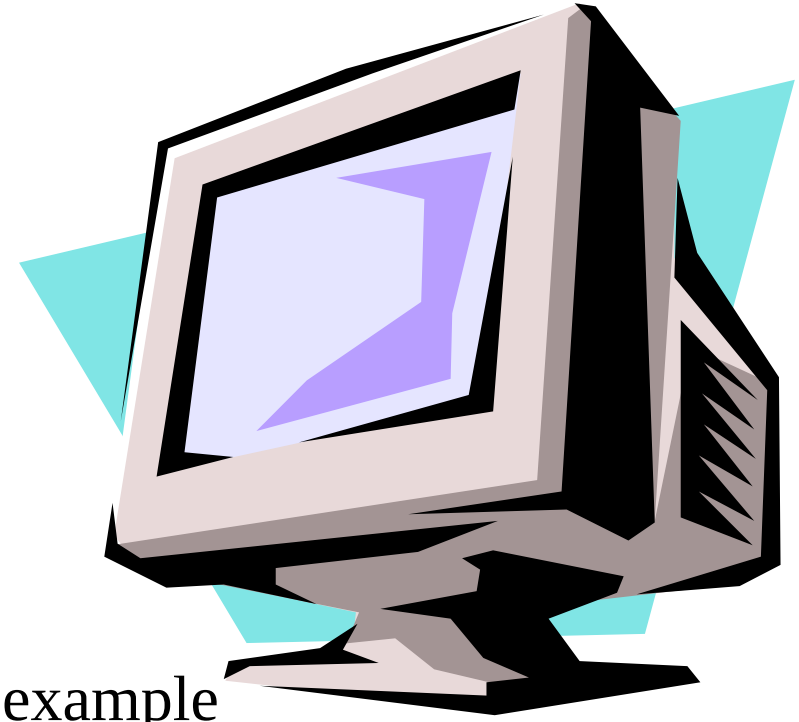

Screen Clarity

- Standard screen resolutions
  - 640 x 480
  - 800 x 600
  - 1024 x 768
  - 1280 x 1024
  - 1600 x 1200

  - in pixels … …

Q&A

- How many pixels are rendered with 1024 x 768 screen resolution?

Communications Hardware

- Facilitate networks
  - modems
  - hubs and other components of a network

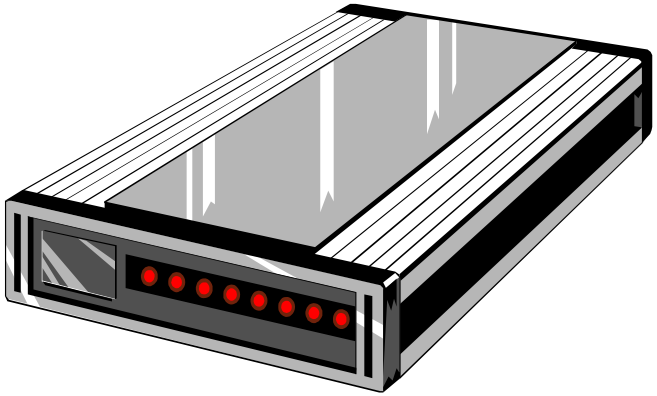

Ports: connecting peripherals to the computers

- Parallel port (IEEE 1284)
  - printers, some scanners
- Serial port (RS-232)
  - modems, scanners, mice
- These now being replaced by …

USB (Universal Serial Bus)

- USB
  - industry standard developed in the mid-1990s that defines the cables, connectors and protocols used for connection, communication and power supply between computers and electronic devices
  - standardized the connection of computer peripherals, such as keyboards, pointing devices, digital cameras, printers, portable media players, disk drives and network adapters to PCs
  - replaced earlier interfaces, such as serial and parallel ports, as well as separate power chargers for portable devices

Connectors

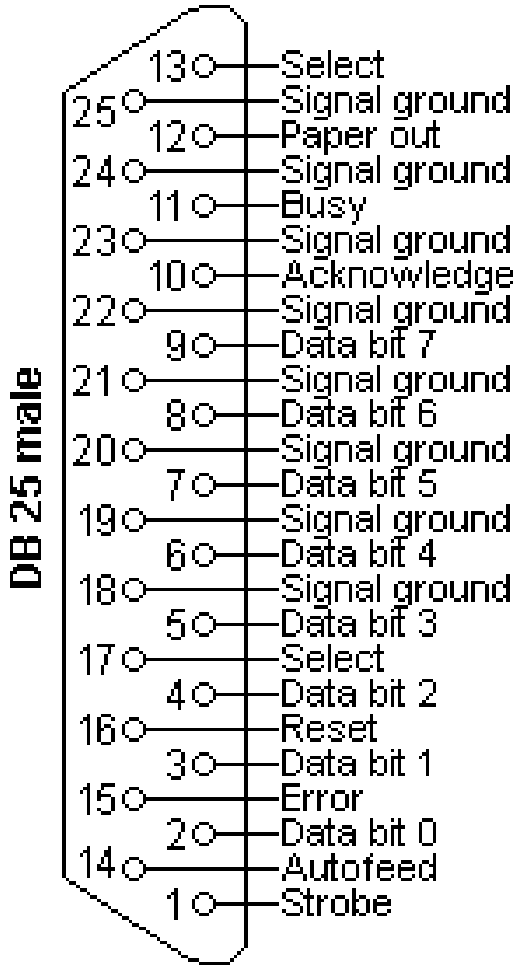
DB 25 male
13 Select
25 Signal ground
12 Paper out
24 Signal ground
11 Busy
23 Signal ground
10 Acknowledge
22 Signal ground
9 Data bit 7
21 Signal ground
8 Data bit 6
20 Signal ground
7 Data bit 5
19 Signal ground
6 Data bit 4
18 Signal ground
5 Data bit 3
17 Select
4 Data bit 2
16 Reset
3 Data bit 1
15 Error
2 Data bit 0
14 Autofeed
1 Strobe

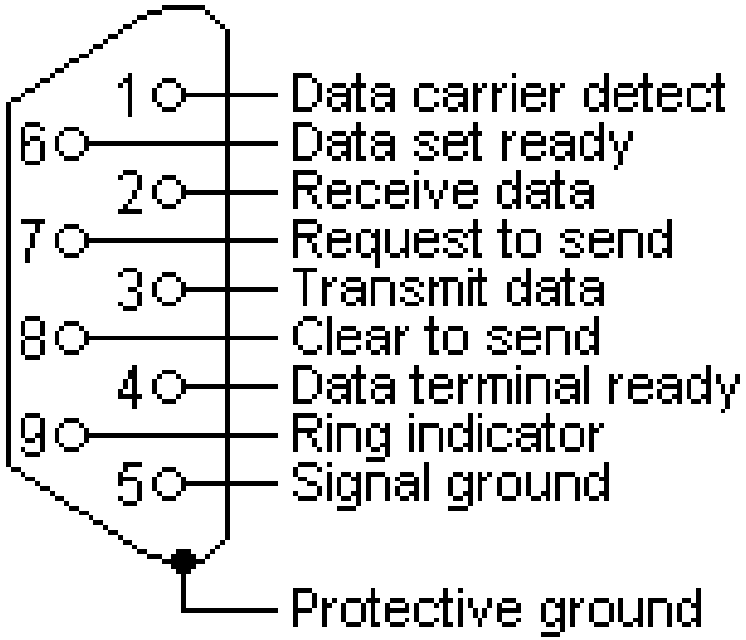
1 Data carrier detect
6 Data set ready
2 Receive data
7 Request to send
3 Transmit data
8 Clear to send
4 Data terminal ready
9 Ring indicator
5 Signal ground
Protective ground

What else is inside a computer? Power Supply

- Power supply
  - protected by power surge protector or
  - uninterrupted power supply unit (UPS)

Q&A

- Name 2 typical applications run by coprocessors.
- Name 3 different types of bus in a computer system.
- List two reasons behind bus bottleneck.
- Highlight the 2 major components of a CPU.
- What tasks are performed during a machine cycle.
- Computers & printers are usually connected via what type of ports?

Q&A

- RISC refers to
- a. RAM that supports fewer instructions than do CISC chips.
- b. instructions that support fewer codes than do CISC chips.
- c. processors that support fewer instructions than do CISC chips.
- d. coding schemes that are used as a back–up to CISC.

Q&A

- Q: The computer's main processor follows its instructions to manipulate data into information.
- a. hardware
- b. CPU
- c. software
- d. Unicode

Q&A

- Q: This type of hardware consists of devices that translate data into a form the computer can process.
- a. application
- b. input
- c. system
- d. None of the above is correct.

Q&A

- Q. Name 4 registers that are always used during each instruction execution.

Readings

- [Wil06] Chapter 3, sections 3.1 - 3.2.